JTD4040 D20

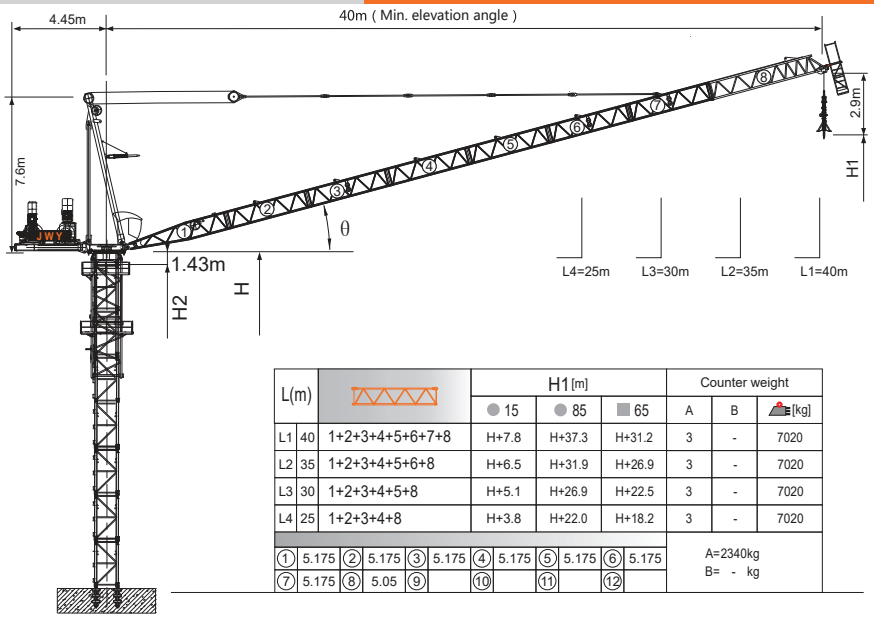

L(m)			H1[m]			Counter weight		
			● 15	● 85	■ 65	A	B	[kg]
L1	40	1+2+3+4+5+6+7+8	H+7.8	H+37.3	H+31.2	3	-	7020
L2	35	1+2+3+4+5+6+8	H+6.5	H+31.9	H+26.9	3	-	7020
L3	30	1+2+3+4+5+8	H+5.1	H+26.9	H+22.5	3	-	7020
L4	25	1+2+3+4+8	H+3.8	H+22.0	H+18.2	3	-	7020

①	5.175	②	5.175	③	5.175	④	5.175	⑤	5.175	⑥	5.175	A=2340kg
⑦	5.175	⑧	5.05	⑨		⑩		⑪		⑫		B= - kg

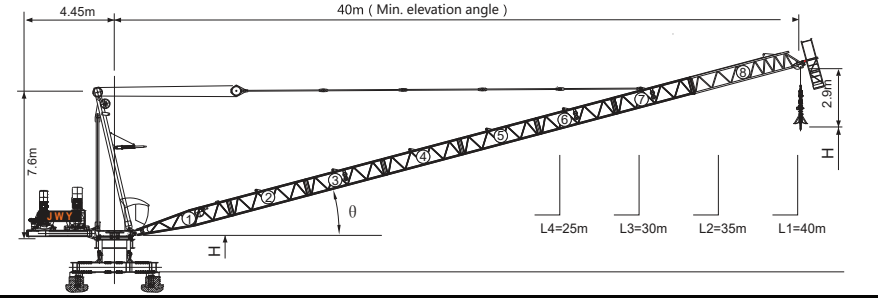

Jib root hinge height

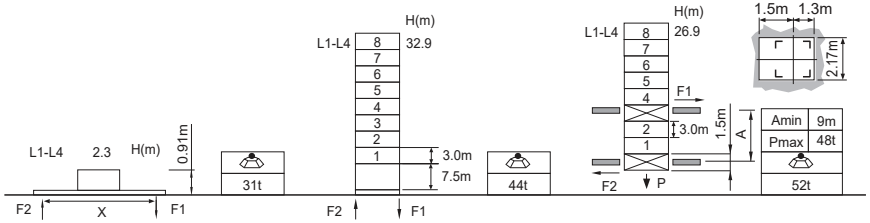

L68B2 ⍁2.0m		
	H	Jib root hinge height (not include the fixing angle)
	H1	Height under hook
	H2	Tower body height: H2 = [H - 1.43m]

Total weight of free standing height (excludes counter weight and ballast)
Total weight of counter weight
Please consult with us in case higher freestanding height needed.

● In service
■ Out of service
F Reactions
Please refer to the user manual for reaction force

Load diagrams

R	falls	R(C$_{MAX}$)	C$_{MAX}$	m	10	12	15	17	20	22	25	27	30	32	35	37	40
40m		4.6~22.6 [57.8]	10	t	10.0	10.0	10.0	10.0	10.0	10.0	8.7	7.8	6.6	5.9	5.1	4.6	4.0
		4.6~16.6 [67.4]	15	t	15.0	15.0	15.0	14.6	11.8	10.4	8.7	7.8	6.6	5.9	5.1	4.6	4.0
		4.6~13.1 [72.6]	20	t	20.0	20.0	17.1	14.6	11.8	10.4	8.7	7.8	6.6	5.9	5.1	4.6	4.0
35m		4.1~22.9 [51.6]	10	t	10.0	10.0	10.0	10.0	10.0	10.0	8.9	7.9	6.8	6.1	5.2		
		4.1~16.8 [63.5]	15	t	15.0	15.0	15.0	14.8	12.1	10.6	8.9	7.9	6.8	6.1	5.2		
		4.1~13.2 [69.9]	20	t	20.0	20.0	17.2	14.8	12.1	10.6	8.9	7.9	6.8	6.1	5.2		
30m		3.7~23.2 [42.5]	10	t	10.0	10.0	10.0	10.0	10.0	10.0	9.0	8.1	6.9				
		3.7~16.9 [58.2]	15	t	15.0	15.0	15.0	14.9	12.2	10.7	9.0	8.1	6.9				
		3.7~13.3 [66.0]	20	t	20.0	20.0	17.4	14.9	12.2	10.7	9.0	8.1	6.9				
25m		3.2~23.3 [26.5]	10	t	10.0	10.0	10.0	10.0	10.0	10.0	9.1						
		3.2~17.0 [50.0]	15	t	15.0	15.0	15.0	15.0	12.3	10.8	9.1						
		3.2~13.4 [60.3]	20	t	20.0	20.0	17.5	15.0	12.3	10.8	9.1						

Anchorages

An[m]	A1	A2	A3	A4	A5	A6	A7	A8	A9	A10
	30.0	51.0	72.0	93.0	114.0	135.0	156.0	177.0	-	-
H2 [m]	55.5	76.5	97.5	115.5	136.5	157.5	178.5	199.5 ※	-	-

※ Over this height please contact us

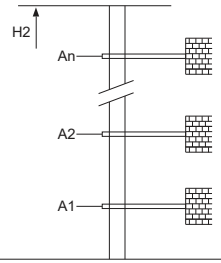

Mechanisms

	100LVF50KL		m/min	0~44	0~88	75kW
			t	8.0	4.0	
			m/min	0~29.3	0~58.6	
			t	12.0	6.0	
			m/min	0~22	0~44	
			t	16.0	8.0	
	120LVF50KL-P		m/min	0~45	0~90	90kW
			t	8.0	4.0	
			m/min	0~30	0~60	
			t	12.0	6.0	
			m/min	0~22.5	0~45	
			t	16.0	8.0	
	75VVF40KL	15~80		1min40s		55kW
	RCV95	rpm		0~0.8		2x5.5kW
	380V 50Hz(±5%) 380V 60Hz(±5%) 440V 60Hz(±5%)			100LVF50KL 170kVA 120LVF50KL-P 185kVA		kVA

※ Please consult us △ Option