JTD4040 D16

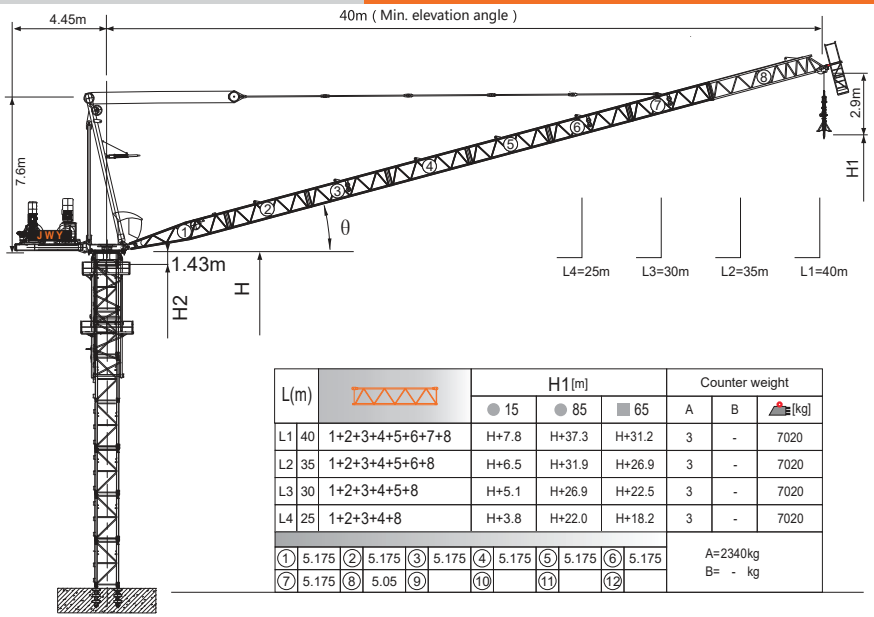

L(m)			H1[m] 15	H1[m] 85	H1[m] 65	Counter weight A	Counter weight B	Counter weight [kg]
L1	40	1+2+3+4+5+6+7+8	H+7.8	H+37.3	H+31.2	3	-	7020
L2	35	1+2+3+4+5+6+8	H+6.5	H+31.9	H+26.9	3	-	7020
L3	30	1+2+3+4+5+8	H+5.1	H+26.9	H+22.5	3	-	7020
L4	25	1+2+3+4+8	H+3.8	H+22.0	H+18.2	3	-	7020

①	5.175	②	5.175	③	5.175	④	5.175	⑤	5.175	⑥	5.175	A=2340kg
⑦	5.175	⑧	5.05	⑨		⑩		⑪		⑫		B= - kg

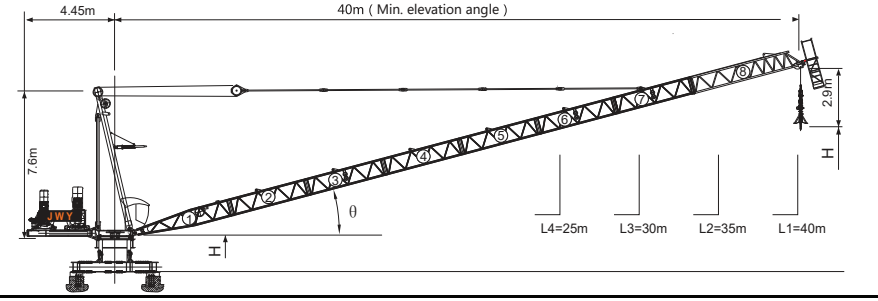

Jib root hinge height

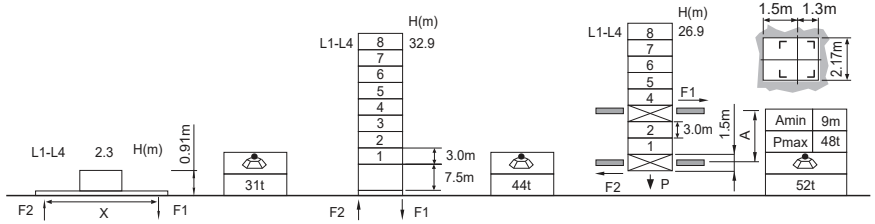

L68B2 ⍁2.0m		
	H	Jib root hinge height (not include the fixing angle)
	H1	Height under hook
	H2	Tower body height: H2 = [H - 1.43m]

Total weight of free standing height (excludes counter weight and ballast)
Total weight of counter weight
Please consult with us in case higher freestanding height needed.

● In service
■ Out of service
F Reactions
Please refer to the user manual for reaction force

Load diagrams

R	falls	R(C$_{MAX}$)	C$_{MAX}$	m	10	12	15	17	20	22	25	27	30	32	35	37	40
40m		4.6~26.5 [50.9]	8	t	8.0	8.0	8.0	8.0	8.0	8.0	8.0	7.8	6.6	5.9	5.1	4.6	4.0
		4.6~19.8 [62.3]	12	t	12.0	12.0	12.0	12.0	11.8	10.4	8.7	7.8	6.6	5.9	5.1	4.6	4.0
		4.6~15.8 [68.6]	16	t	16.0	16.0	16.0	14.6	11.8	10.4	8.7	7.8	6.6	5.9	5.1	4.6	4.0
35m		4.1~26.9 [42.8]	8	t	8.0	8.0	8.0	8.0	8.0	8.0	8.0	7.9	6.8	6.1	5.2		
		4.1~20.0 [57.5]	12	t	12.0	12.0	12.0	12.0	12.0	10.1	8.9	7.9	6.8	6.1	5.2		
		4.1~15.9 [65.0]	16	t	16.0	16.0	16.0	14.8	12.1	10.1	8.9	7.9	6.8	6.1	5.2		
30m		3.7~27.2 [29.5]	8	t	8.0	8.0	8.0	8.0	8.0	8.0	8.0	8.0	6.9				
		3.7~20.2 [50.4]	12	t	12.0	12.0	12.0	12.0	12.0	10.7	9.0	8.1	6.9				
		3.7~16.1 [60.0]	16	t	16.0	16.0	16.0	14.9	12.2	10.7	9.0	8.1	6.9				
25m		3.2~25.0 [16.0]	8	t	8.0	8.0	8.0	8.0	8.0	8.0	8.0						
		3.2~20.3 [39.0]	12	t	12.0	12.0	12.0	12.0	12.0	10.8	9.1						
		3.2~16.2 [52.5]	16	t	16.0	16.0	16.0	15.0	12.3	10.8	9.1						

Anchorages

An[m]	A1	A2	A3	A4	A5	A6	A7	A8	A9	A10
	30.0	51.0	72.0	93.0	114.0	135.0	156.0	177.0	-	-
H2 [m]	55.5	76.5	97.5	115.5	136.5	157.5	178.5	199.5 ※	-	-

※ Over this height please contact us

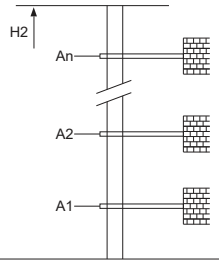

Mechanisms

75LVF40KL	m/min	0~41	0~82	55kW	1000m
	t	8.0	4.0		>1000m※
	m/min	0~27.3	0~54.6		
	t	12.0	6.0		
	m/min	0~20.5	0~41		
	t	16.0	8.0		
75VVF40KL	15~80	1min40s		55kW	
RCV95	rpm	0~0.8		2x5.5kW	
380V 50Hz(±5%) 380V 60Hz(±5%) 440V 60Hz(±5%)		145kVA		kVA	

※ Please consult us △ Option