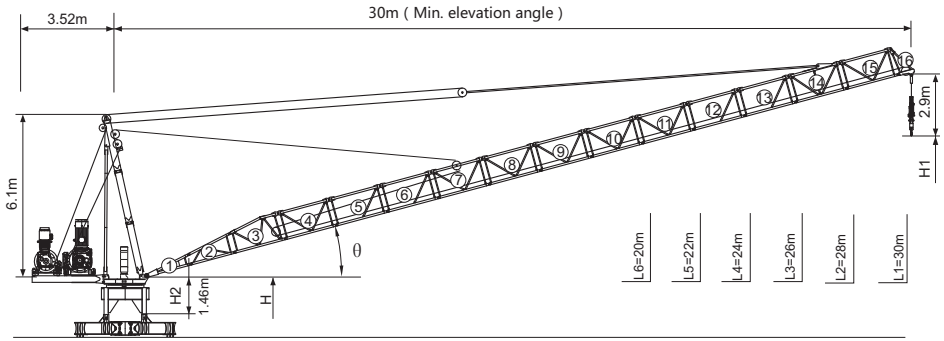

L(m)			H1[m]			Counter weight		
			● 15	● 85	■ 65	A	B	[kg]
L1	30	1+2+3+4+5+6+7+[8~13]+14+15	H+4.7	H+26.9	H+24.2	-	-	-
L2	28	1+2+3+4+5+6+7+[8~12]+14+15	H+4.2	H+24.9	H+22.4	-	-	-
L3	26	1+2+3+4+5+6+7+[8~11]+14+15	H+3.7	H+22.9	H+20.6	-	-	-
L4	24	1+2+3+4+5+6+7+[8~10]+14+15	H+3.2	H+20.9	H+18.8	-	-	-
L5	22	1+2+3+4+5+6+7+8+9+14+15	H+2.7	H+18.9	H+17.0	-	-	-
L6	20	1+2+3+4+5+6+7+8+14+15	H+2.2	H+16.9	H+15.2	-	-	-

①	1.7	②	1.7	③	2.0	④⑦			2.0
⑭	2.0	⑯	0.6			⑤⑥⑨⑩⑪⑫⑬⑮			2.0

A= - kg
B= - kg

Jib root hinge height

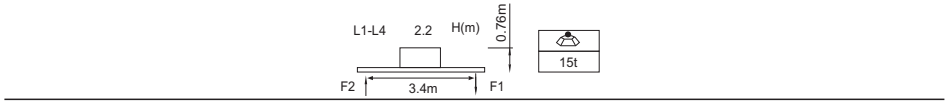

L46A1 ☐1.6m	H	Jib root hinge height (not include the fixing angle)
	H1	Height under hook
	H2	Tower body height: H2 = [H - 1.46m]

Total weight of free standing height (excludes counter weight and ballast)
Total weight of counter weight
Please consult with us in case higher freestanding height needed.

● In service
■ Out of service
F Reactions

Please refer to the user manual for reaction force

Load diagrams

R	falls	R(Cmax)	Cmax	m	10	12	14	16	18	20	22	24	26	28	30
30m		3.5~19.0 [52.5]	5	t			5.0			4.6	4.0	3.5	3.1	2.7	2.5
		3.5~13.9 [63.9]	7.5	t		7.5	7.4	6.3	5.4	4.6	4.0	3.5	3.1	2.7	2.5
		3.5~11.0 [70.0]	10	t	10.0	9.0	7.4	6.3	5.4	4.6	4.0	3.5	3.1	2.7	2.5
28m		3.3~19.3 [48.3]	5	t			5.0			4.8	4.2	3.7	3.2	2.9	
		3.3~14.1 [61.4]	7.5	t		7.5		6.4	5.5	4.8	4.2	3.7	3.2	2.9	
		3.3~11.1 [68.2]	10	t	10.0	9.1	7.6	6.4	5.5	4.8	4.2	3.7	3.2	2.9	
26m		3.1~19.6 [43.4]	5	t			5.0			4.8	4.2	3.7	3.3		
		3.1~14.3 [58.6]	7.5	t		7.5		6.5	5.6	4.8	4.2	3.7	3.3		
		3.1~11.2 [66.2]	10	t	10.0	9.2	7.7	6.5	5.6	4.8	4.2	3.7	3.3		
24m		2.9~19.9 [36.7]	5	t			5.0			4.9	4.4	3.9			
		2.9~14.5 [55.1]	7.5	t		7.5		6.6	5.7	4.9	4.4	3.9			
		2.9~11.3 [63.8]	10	t	10.0	9.4	7.8	6.6	5.7	4.9	4.4	3.9			
22m		2.7~20.3 [27.2]	5	t			5.0				4.5				
		2.7~14.6 [50.8]	7.5	t		7.5		6.7	5.8	5.1	4.5				
		2.7~11.4 [60.9]	10	t	10.0	9.5	7.9	6.7	5.8	5.1	4.5				
20m		2.5~20.0 [15.0]	5	t			5.0								
		2.5~14.8 [45.3]	7.5	t		7.5		6.8	5.9	5.2					
		2.5~11.5 [57.3]	10	t	10.0	9.6	8.0	6.8	5.9	5.2					

Mechanisms

	50LVF25KL-G		m/min	0~36	0~72	37kW
			t	5.0	2.5	
			m/min	0~24	0~48	
			t	7.5	3.75	
			m/min	0~18	0~36	
			t	10.0	5.0	

600m
>600m※

	30VVF20KL	15~80	3min	22kW
	RCV120	rpm	0~0.8	5.5kW
	380V 50Hz(±5%) 380V 60Hz(±5%) 440V 60Hz(±5%)		75kVA	kVA

※ Please consult us
△ Option