JTD2030 D8

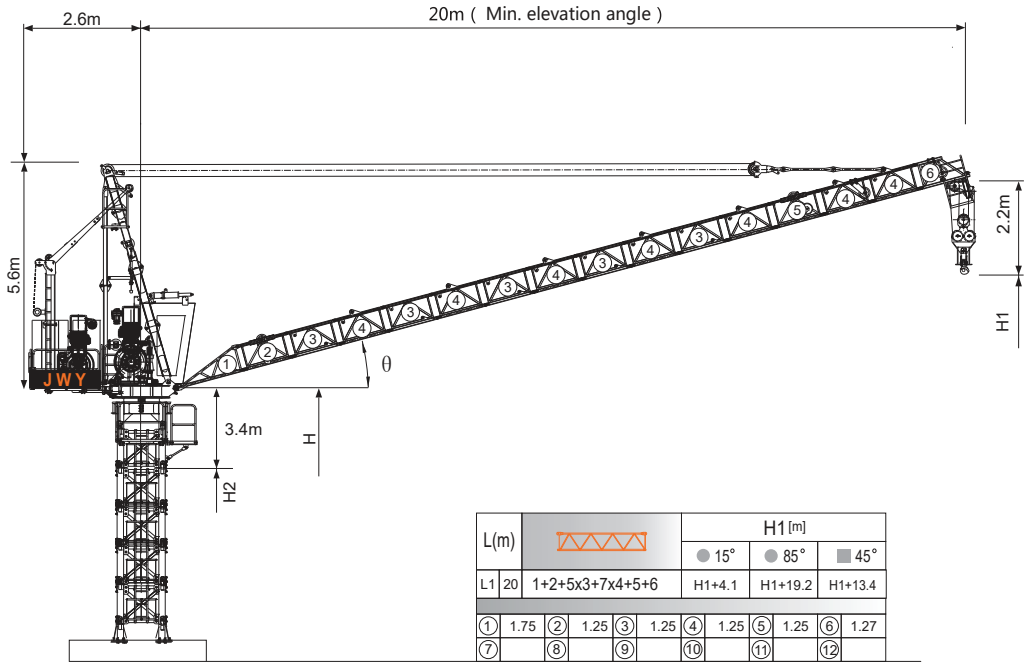

L(m)		H1 [m]		
		● 15°	● 85°	■ 45°
L1 20	1+2+5x3+7x4+5+6	H1+4.1	H1+19.2	H1+13.4

①	1.75	②	1.25	③	1.25	④	1.25	⑤	1.25	⑥	1.27		
⑦		⑧		⑨		⑩		⑪		⑫			

Load diagrams

R	falls	R(C$_{MAX}$)	C$_{MAX}$	m	8	9	10	11	12	13	14	15	16	17	18	19	20
20m		4.3~16.2 [38.8]	4	t	4.0	4.0	4.0	4.0	4.0	4.0	4.0	4.0	4.0	3.7	3.5	3.2	3.0
		4.3~11.7 [56.2]	6	t	6.0	6.0	6.0	6.0	5.8	5.2	4.8	4.4	4.1	3.7	3.5	3.2	3.0
		4.3~9.1 [64.8]	8	t	8.0	8.0	7.1	6.4	5.8	5.2	4.8	4.4	4.1	3.7	3.5	3.2	3.0

Anchorages

An[m]	A1	A2	A3	A4	A5	A6	A7	A8	A9	A10
	33.0	54.0	75.0	96.0	117.0	138.0	159.0	180.0	-	-
H2 [m]	67.5	88.5	106.5	127.5	148.5	169.5	190.5	211.5 ※	-	-

※ Over this height please contact us

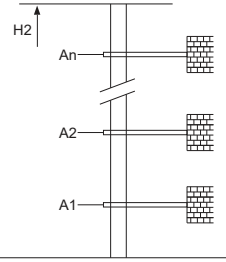

Jib root hinge height

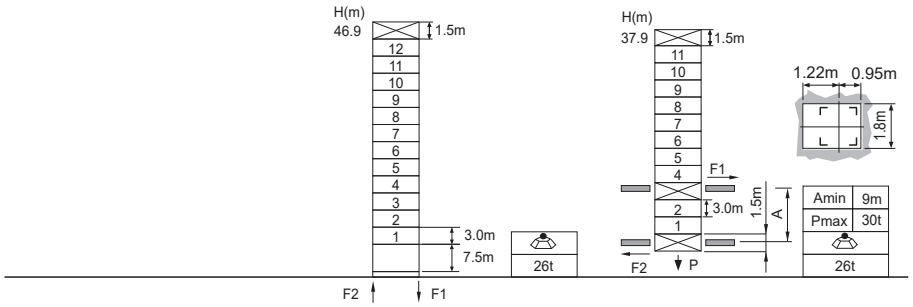

L46A1 ⍁1.6m		
	H	Jib root hinge height (not include the fixing angle)
	H1	Height under hook
	H2	Tower body height: H2 = [H - 3.4m]

Total weight of free standing height (excludes counter weight and ballast)
Total weight of counter weight
Please consult with us in case higher freestanding height needed.

● In service
■ Out of service
F Reactions
Please refer to the user manual for reaction force

Mechanisms

	50LVF20KL-A		m/min	0~42	0~84	37kW
			t	3.0	1.5	
			m/min	0~28	0~56	
			t	4.5	2.25	
			m/min	0~21	0~42	
			t	6.0	3.0	
	20VVF15KL	15~80		2min		15kW
	RCV95	rpm		0~0.8		5.5kW
	380V 50Hz(±5%) 380V 60Hz(±5%) 440V 60Hz(±5%)			70kVA		kVA

800m
>800m※

※ Please consult us △ Option