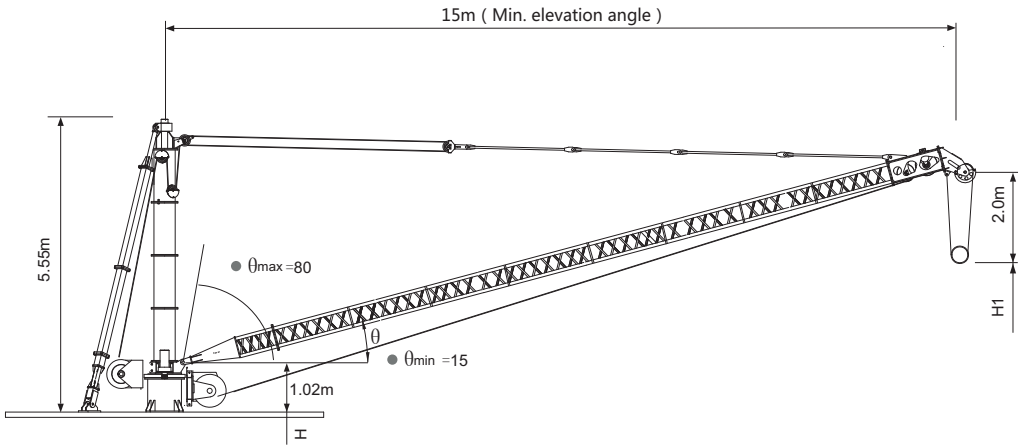

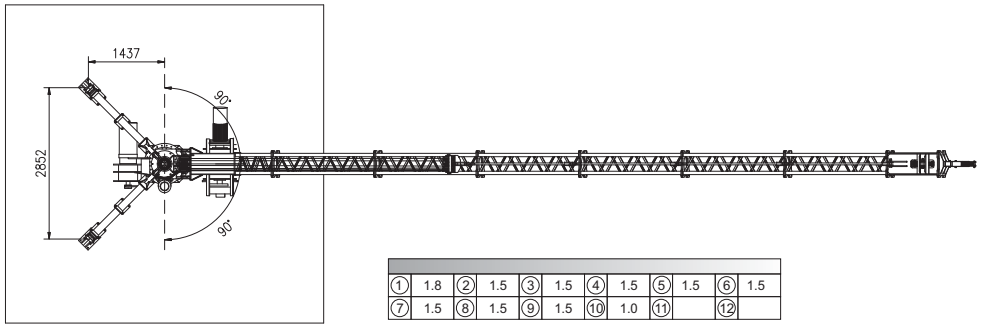

①	1.8	②	1.5	③	1.5	④	1.5	⑤	1.5	⑥	1.5
⑦	1.5	⑧	1.5	⑨	1.5	⑩	1.0	⑪		⑫	

⍁0.4m	H	Jib root hinge height (not include the fixing angle)
	H1	Height under hook
	H2	Tower body height:

(Total weight of free standing height (excludes counter weight and ballast)
Total weight of counter weight
Please consult with us in case higher freestanding height needed.

In service
Out of service
F Reactions

Please refer to the user manual for reaction force

Load diagrams

R	falls	R(C$_{MAX}$)	C$_{MAX}$	m	5	6	7	8	9	10	11	12	13	14	15
15.0m		3.1~15.0	2.5	t	2.5										
		3.1~8.4	5.0	t	5.0				4.6	4.0	3.6	3.2	2.9	2.7	2.5

R	falls	R(C$_{MAX}$)	C$_{MAX}$	m	5	6	7	8	9	10	11	12	13	13.5
13.5m		2.8~13.5	2.5	t	2.5									
		2.8~8.5	5.0	t	5.0				4.6	4.1	3.7	3.3	3.0	2.9

R	falls	R(C$_{MAX}$)	C$_{MAX}$	m	5	6	7	8	9	10	11	12
12.0m		2.5~12.0	2.5	t	2.5							
		2.5~8.6	5.0	t	5.0				4.7	4.1	3.7	3.3

Mechanisms

	18IQ25		m/min	66	33	15KW
			t	0.65	1.3	
			m/min	33	16.5	
			t	1.3	2.0	
	11IQ15LB	min		1		11kW
	BWD2-391	rpm		1		0.75kW
	-	m/min				-
	380V 50Hz(±5%) 440V 60Hz(±5%)			40kVA		kVA

350m
>350m※

Hoisting
Trolleying
Luffing
Slewing
Traveling
Power

※ Please consult us △ Option